BSB2291 RECESSED PAPER TOWEL DISPENSER & 7.5L WASTE RECEPTACLE

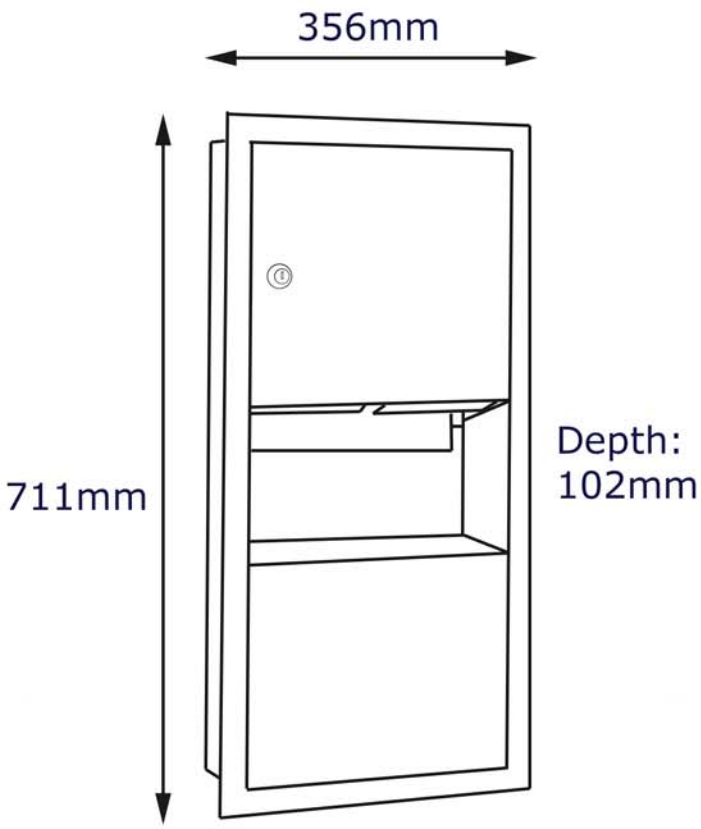

Wall opening:
305mm x 660mm x 103mm

AQUA CONCEPTS
10/46 SMITH ST, SOUTHPORT, QLD 4215 PH: 07 5503 0855 FAX: 07 5503 0877
CAPITOL BUILDING AND SECURITY PRODUCTS, MELBOURNE
53 MILLS RD, BRAESIDE, VIC 3195 PH: 03 9587 5330 FAX: 03 9587 5752
SPECIALISED PROJECT SERVICES
1/151 BEAUCHAMP RD, MATRAVILLE, NSW 1240 PH: 02 9666 8998 FAX: 02 9666 8997