TOILET ROLL HOLDERS

CFT042
Single Controlled Feed Toilet Tissue Dispenser

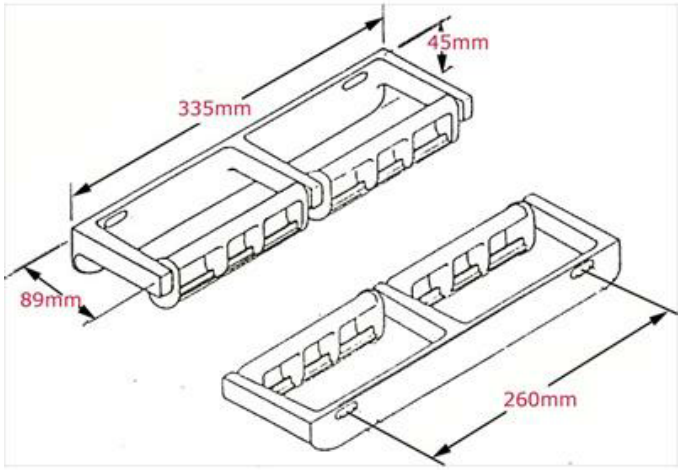

AQUA CONCEPTS
10/46 SMITH ST, SOUTHPORT, QLD 4215 PH: 07 5503 0855 FAX: 07 5503 0877
SPECIALISED PROJECT SERVICES
216/354 EASTERN VALLEY WAY, CHATSWOOD EAST, NSW, 2067
PH: 02 9417 0599 FAX: 02 9417 0755