KALE

# MONDEO

KM73530
Kale Mondeo Back To Wall WC Suite

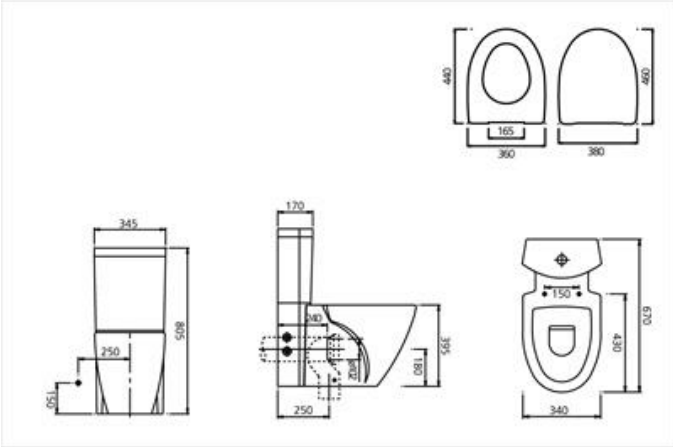


AQUA CONCEPTS
10/46 SMITH ST, SOUTHPORT, QLD, 4215 PH: 07 5503 0855 FAX: 07 5503 0877
SPECIALISED PROJECT SERVICES
216/354 EASTERN VALLEY WAY, CHATSWOOD, NSW, 2067
PH: 02 9417 0599 FAX: 02 9417 0755