LUME

LU35050
Lume Wall Diverter Mixer

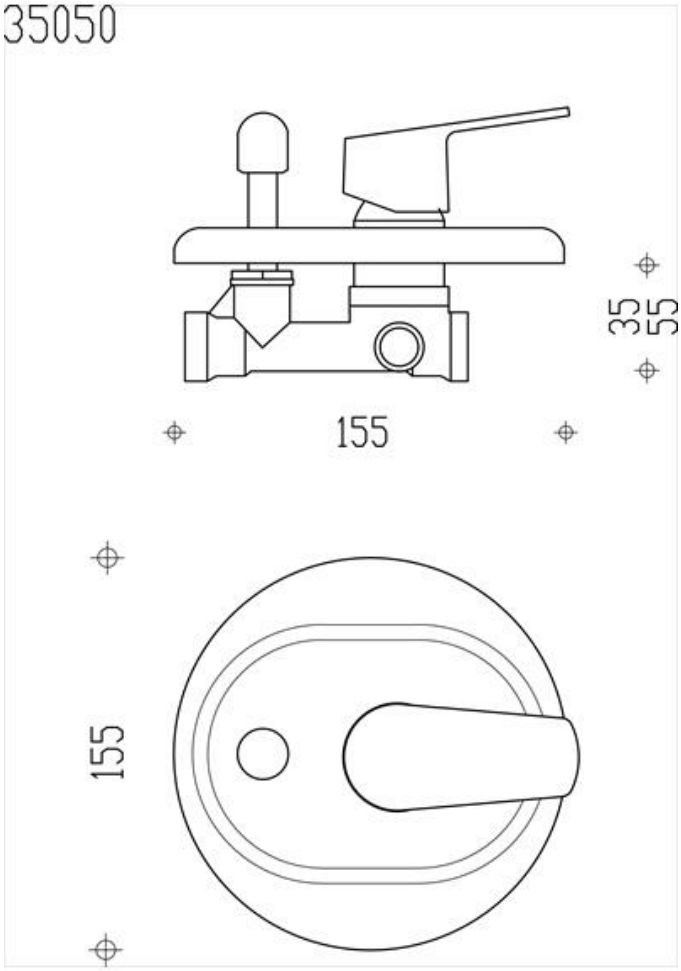

AQUA CONCEPTS
10/46 SMITH ST, SOUTHPORT, QLD, 4215 PH: 07 5503 0855 FAX: 07 5503 0877
SPECIALISED PROJECT SERVICES
PH: 02 9417 0599 FAX: 02 9417 0755

garanzia A VITA
ottone meloda
LIFETIME warranty
AVR ASSOCIATION
SICURAMENTE MADE IN ITALY