PROTEUS

PR16964
Proteus Single Lever Sink Mixer With
Adjustable Spout And Industrial Shower

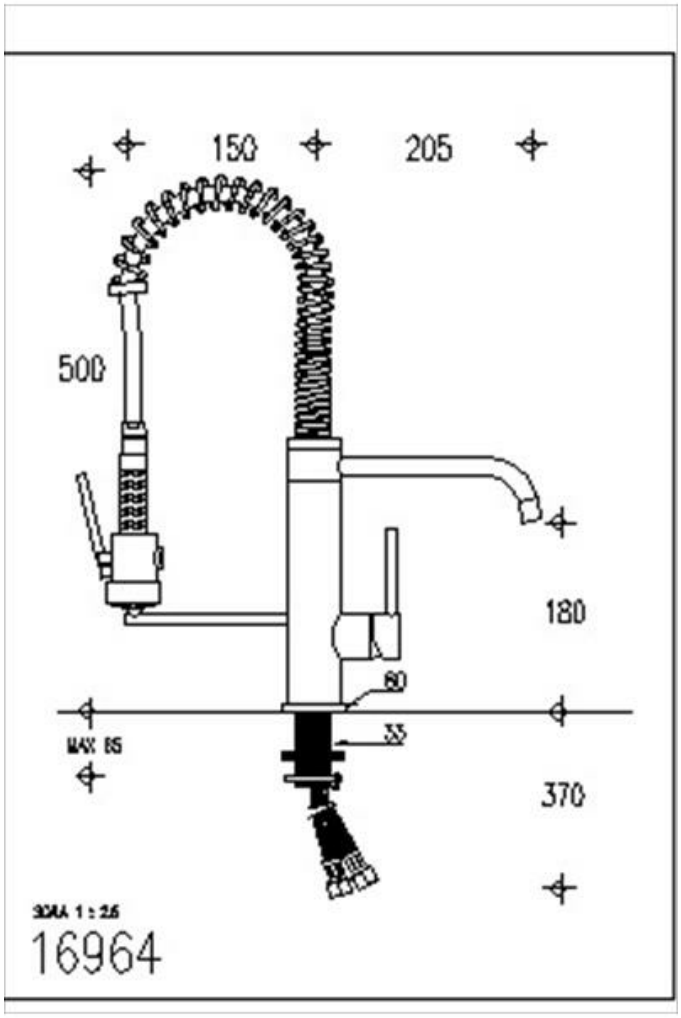

AQUA CONCEPTS
10/46 SMITH ST, SOUTHPORT, QLD, 4215 PH: 07 5503 0855 FAX: 07 5503 0877
SPECIALISED PROJECT SERVICES
PH: 02 9417 0599 FAX: 02 9417 0755

garanzia A VITA
LIFETIME warranty
SICURAMENTE MADE IN ITALY